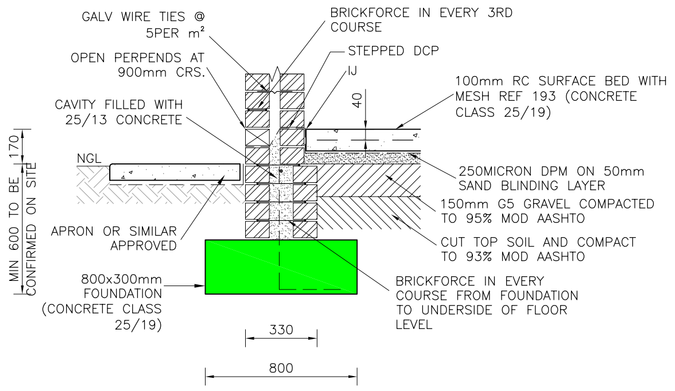

TYPICAL EXTERNAL WALL FOUNDATION
SCALE 1:20

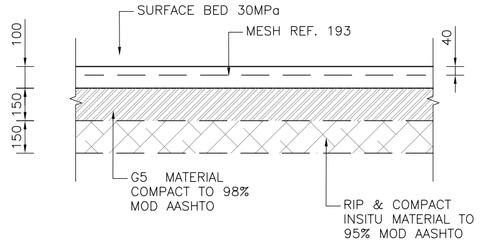

SECTION DETAIL OF PREPARATION OF SUB BASE
SCALE 1:20

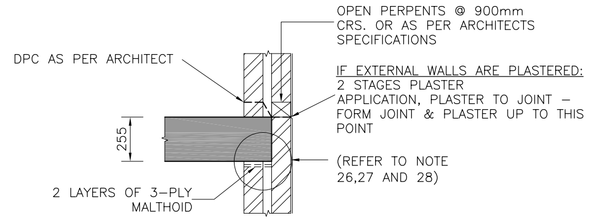

TYPICAL FLOOR SECTION
SCALE 1:25

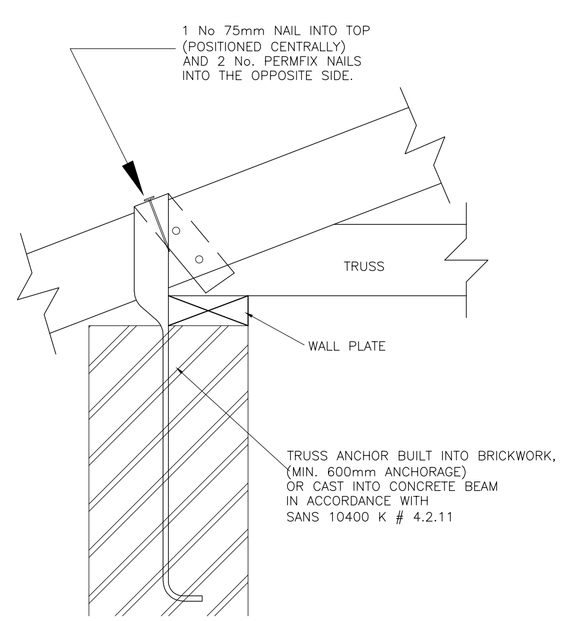

NOTE:
USE 32mmx1,2mm OR 1,6mm GALVANISED eCo WALL TIE IN ACCORDANCE WITH SANS 10400 K # 4.2.11

IT IS THE RESPONSIBILITY OF THE CONTRACTOR TO ENSURE THAT THE CORRECT TRUSS ANCHORS HAVE BEEN PROVIDED

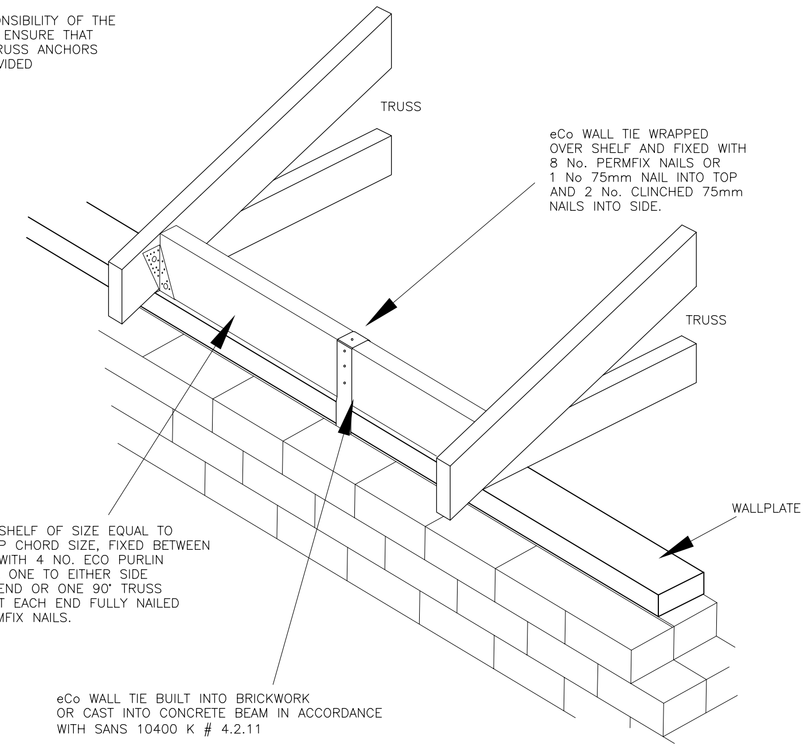

ROOF TRUSS HOLDING DOWN DETAIL
SCALE 1:20

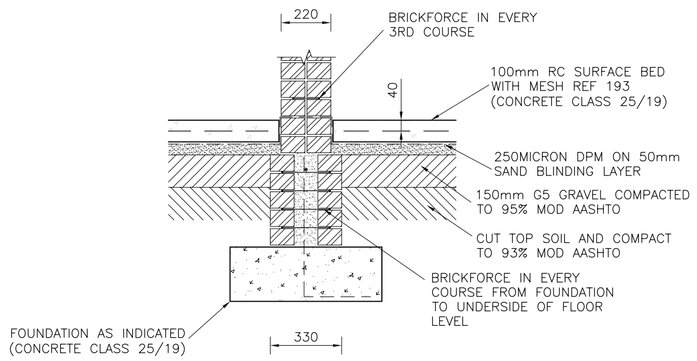

TYPICAL INTERNAL 220 WALL FOUNDATION
SCALE 1:20

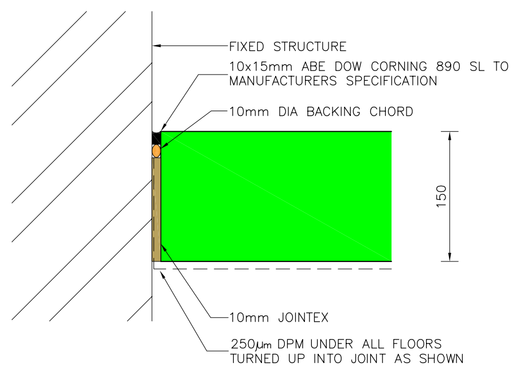

ISOLATION JOINT
SCALE 1:5

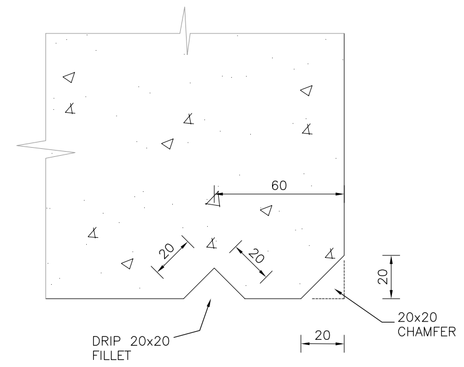

DETAIL A
CHAMFER & DRIP DETAIL
SCALE 1:2

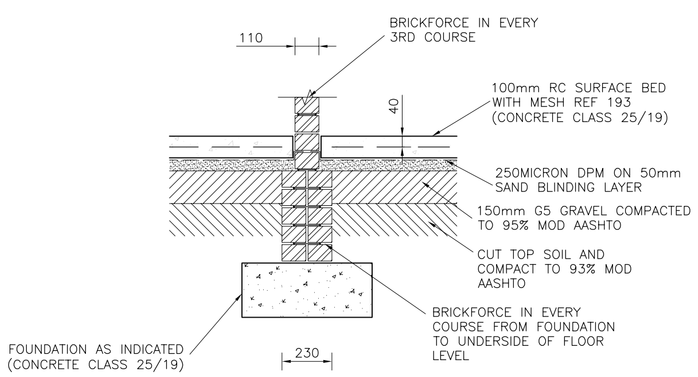

TYPICAL INTERNAL 110 WALL FOUNDATION
SCALE 1:20

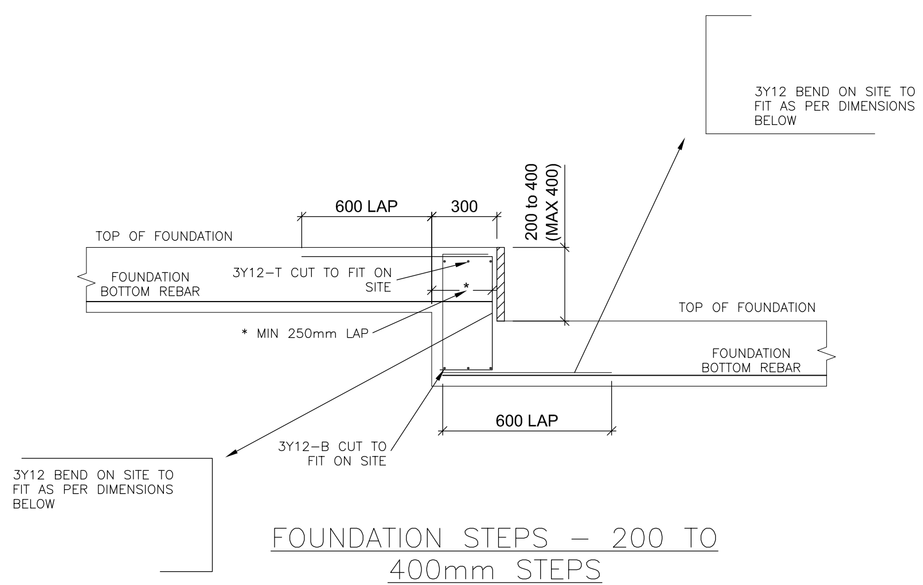

FOUNDATION STEPS – 200 TO 400mm STEPS
SCALE 1:20

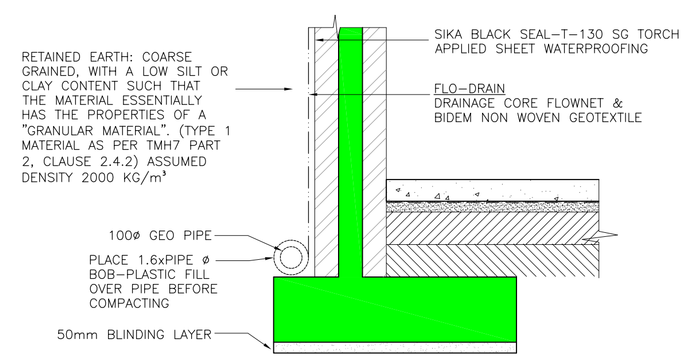

RETAINING WALL DETAIL
SCALE 1:25

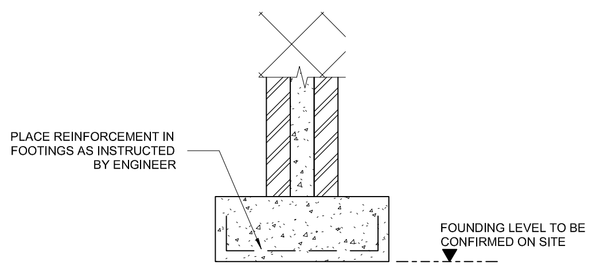

DENSITY OF FOUNDING MATERIAL TO BE TESTED BY ENGINEER. REFER TO DCP RESULTS ELSEWHERE. SHOULD PENETRATION RATE (DN) EXCEED THE RECOMMENDED DN RATES BELOW, THE FOUNDATION TRENCHES SHOULD BE PROPERLY SATURATED WITH WATER AND COMPACTED WITH A WACKER/PLATE COMPACTER TO MIN 93% MOD AASHTO DENSITY

FOUNDATION DESIGN ON SAND:

- SINGLE STOREY DN SHOULD NOT EXCEED 20mm/blow
- DOUBLE STOREY DN SHOULD NOT EXCEED 15mm/blow

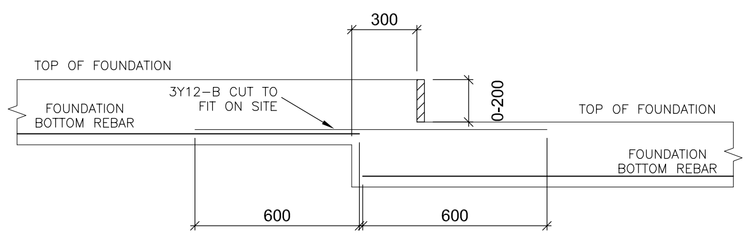

FOUNDATION STEPS UP TO 200mm
SCALE 1:20

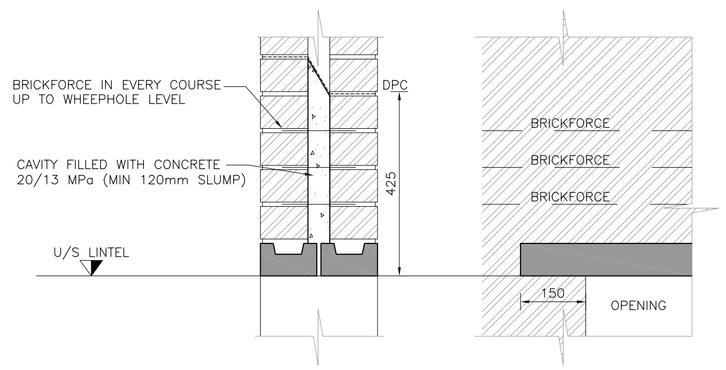

WINDOW OPENING FROM 1.5–2m DETAIL
SCALE 1:10

REV.	BY	DESCRIPTION	DATE	APPR'D
A	H.J.F	FOR CONSTRUCTION	24-07-02	

DRG. No.	REFERENCE DRAWING

STATUTORY NOTE:
THE CLIENT IS RESPONSIBLE FOR ENSURING COMPLIANCE TO ANY LOCAL HEALTH AND SAFETY LAWS AND REGULATIONS

ALTRAMA
Structural Engineering

COPYRIGHT AND USE OF THIS DRAWING IS RESERVED BY ALTRAMA

DESIGNED	H.FOSTER	DRAWN	M.MOORE
CHECKED	H.FOSTER	PROCESS ENGINEER	
CIVIL ENGINEER		STRUCTURAL ENGINEER	H. FOSTER
INSTRUMENT ENGINEER		ELECTRICAL ENGINEER	
MECHANICAL ENGINEER		CO-ORDINATION ENGINEER	

APPROVED	H. FOSTER	201770169
	NAME	ECSA REG. NUMBER

PROPOSED ALTERATION & ADDITIONS ON ERF 93 BEACHVIEW

DETAILS DRAWING

SCALE	AS SHOWN	DATE	2024-07-02
DRAWING NUMBER	PE891-100-SC-001	A1	REVISION A