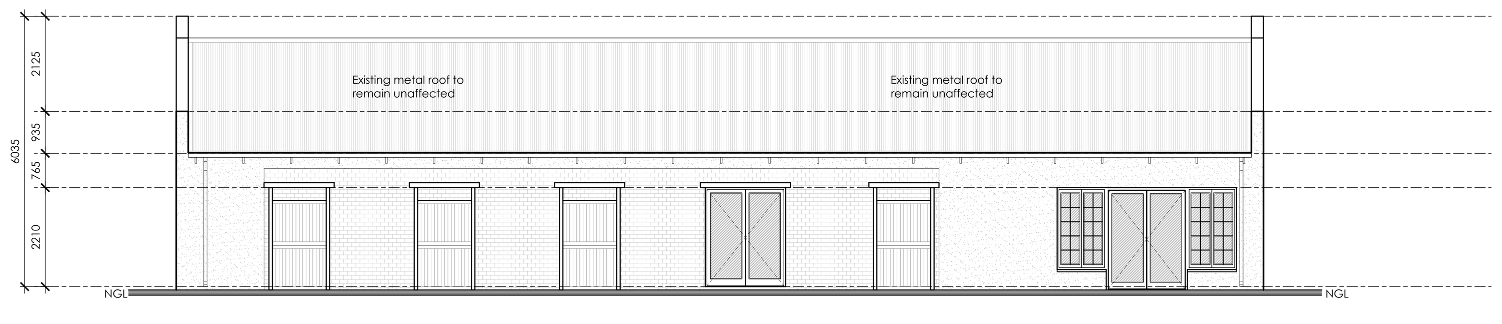


## NORTH ELEVATION / EX. FARM STALL
SCALE 1:100

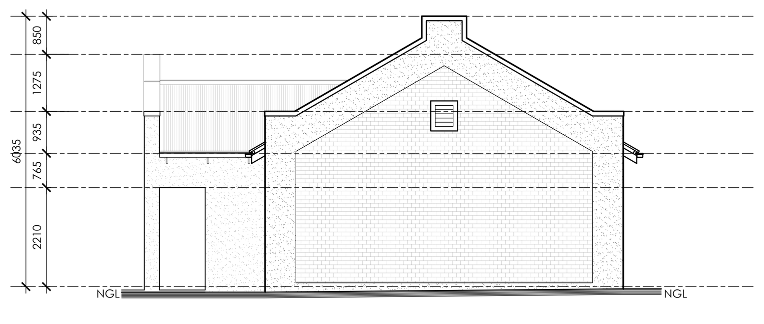


## EAST ELEVATION / EX. FARM STALL
SCALE 1:100

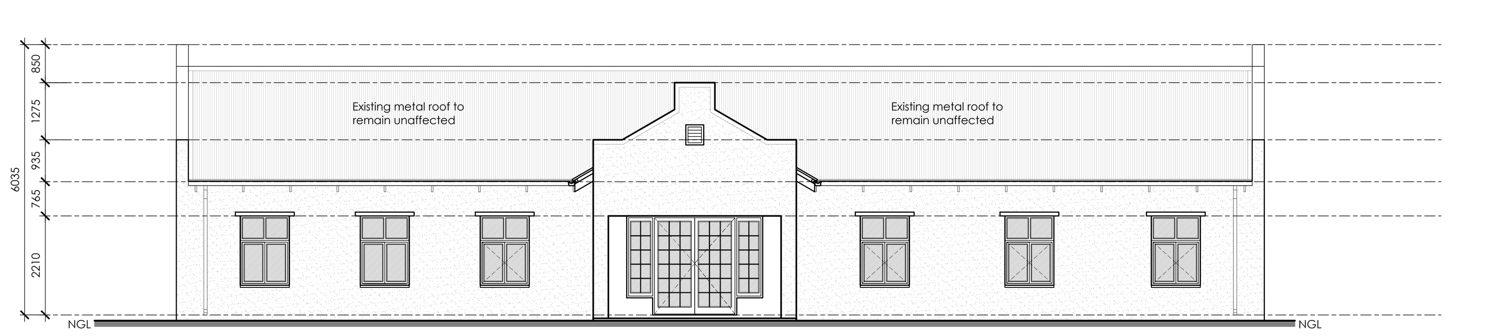


## SOUTH ELEVATION / EX. FARM STALL
SCALE 1:100

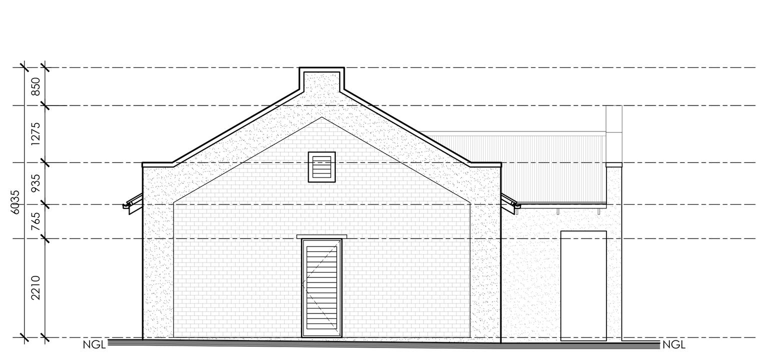


## WEST ELEVATION / EX. FARM STALL
SCALE 1:100

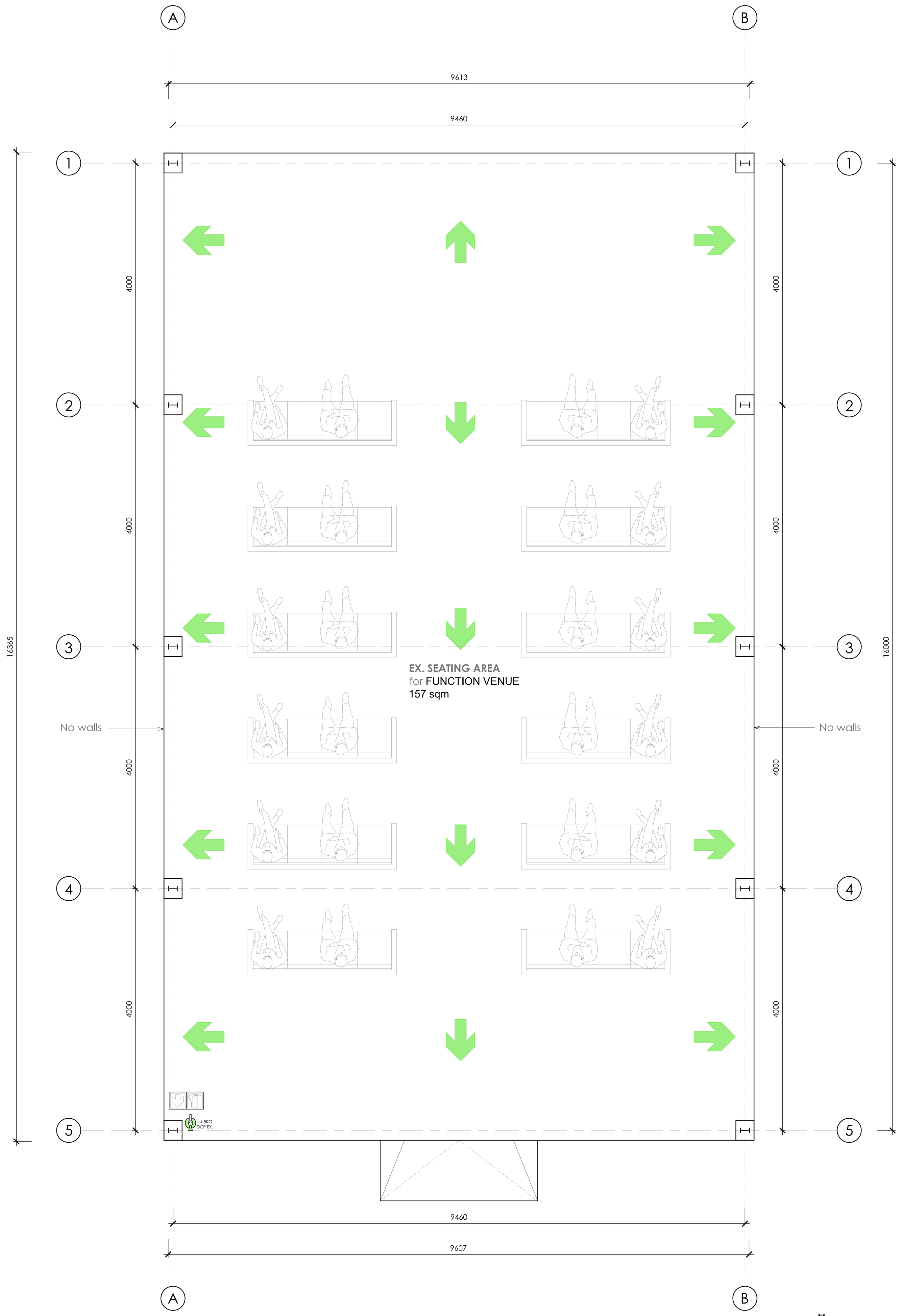


## FLOOR PLAN / EX. BUILDING (8)
SCALE 1:50

| FENESTRATION CALCULATIONS - PROPOSED BUILDING (1-3) | | | | | | | | | | | | | | |
|---|---|---|---|---|---|---|---|---|---|---|---|---|---|---|
| Tag | Frame-Glazing | Width | Height | A | P-Value | G | O | M-Value | Min. P | U-Value | U-Value (Cur.) | SHGC | SHGC (Cur.) |
| W1/1 | HINGED W/D: 6.38mm Clear (Single) | 1200,00 | 1000,00 | 1,20 | 600,00 | 500,00 | N | 0,54 | 810 | Any Solution | 5,93 | Any Solution | 0,57 |
| W2/1 | HINGED W/D: 6.38mm Clear (Single) | 1200,00 | 1000,00 | 1,20 | 600,00 | 500,00 | S | 0,54 | 810 | Any Solution | 5,93 | Any Solution | 0,57 |
| W3/1 | HINGED W/D: 6.38mm Clear (Single) | 1200,00 | 1000,00 | 1,20 | 600,00 | 500,00 | W | 0,54 | 810 | Any Solution | 5,93 | Any Solution | 0,57 |

| Summary | | | | | |
|---|---|---|---|---|---|
| City/Town | Latitude | Zone | Nett Floor Area | Fenestation Area | Glazing % |
| Port Elizabeth | 33.962 | 4 | 47 | 3,60 | 7,66 |

## APPLICATION OF SANS 10400-XA (Ed.2)

ZONE 4 - CLASSIFICATION H3 / Domestic Residences

| | | REQUIREMENTS | ACTUAL | STATUS |
|---|---|---|---|---|
| 1 | DESIGN | The orientation is in accordance with the requirements of 5.1 | Building facing North/South with longest axis orientated East/West | In order |
| 2 | SHADING | The shading is in accordance with the requirements of 5.2 | See **Fenestration** calculations | In order |
| 3 | FENESTRATIONS | The fenestration is in accordance with the requirements of 5.3 | See **Fenestration** calculations | In order |
| 4 | FLOOR INSULATION for under floor heating | The floors are in accordance with the requirements of 5.4<br>5.4.1. Surface bed (Heated) 5.4.2. Suspended (Exposed) R-value => **1.00** | **Under slab (Heated):** mm / W/m.K / R-Val.<br>Lambdaboard 000 / 0.024 / 0.00<br>**Total R-value:** **Req. =>1.0** **0.00** | N/A |
| | | | **Suspended Floor (Exposed):** mm / W/m.K / R-Val.<br>Lambdaboard 000 / 0.024 / 0.00<br>**Total R-value:** **Req. =>1.0** **0.00** | N/A |
| 5 | EXTERNAL WALLS Surface density **> 270kg/m²** | The external walls are in accordance with the requirements of 5.5 (Table 6)<br>Zone 4: 50mm Cavity wall: R-value => 0.6 | **External wall:** mm / W/m.K / R-Val.<br>Outer Air-film (1/20) 1000 / 20 / 0.05<br>15mm plaster 015 / 0.75 / 0.02<br>110mm Brick 110 / 0.82 / 0.13<br>Air-spaces 1000 / 6.8 / 0.15<br>Cavity (Lambdaboard) 000 / 0.024 / 0.00<br>110mm Brick 110 / 0.82 / 0.13<br>15mm plaster 15 / 0.75 / 0.02<br>Inner Air-Film (1/9.4) 1000 / 9.4 / 0.11<br>**Total R-value:** **Req. =>0.60** **0.61** | In order |
| 6 | ROOF & CEILING ASSEMBLY | The roof and ceiling assemblies are in accordance with the requirements of 5.6<br>Zone: **4** Direction of Flow: **UP**<br>**17.5° Metal roof with horizontal ceiling** | 17.5° **PITCH ROOF** mm / W/m.K / R-Val.<br>Outer Air-film (1/20) n/a / n/a / 0.05<br>Metal Roofing sheeting 0.00 / 53.00 / 0.00<br>Air-space & Sisalation n/a / n/a / 0.51<br>Isover Aerolite insulation 135 / 0.044 / 3.07<br>Isover Aerolite insulation 0.00 / 0.04 / 0.00<br>Gypsum Ceiling 6.40 / 0.17 / 0.04<br>Inner Air-Film (1/11.0) n/a / n/a / 0.09<br>**Total R-value:** **Req. =>3.7** **3.76** | In order |
| 7 | BUILDING SEALING | The building sealing is in accordance with the requirements of 5.7 | A foam or rubber compressible strip or a fibrous seal to restrict air leakage shall be fitted to each edge of an external door and other such opening that serves a habitable room.<br>The maximum air leakage for windows and doors shall comply with the requirements of SANS 613. | In order |
| 8 | HOT WATER Classification H3 - Agriculture Employee Accommodation | The building hot water is in accordance with the requirements of 6.1<br>Persons per Bedroom: 2<br>Number of Bedrooms: 1<br>2 Persons per bedroom<br>x 1 Number of bedrooms<br>2 Occupancy | Average annual hot water usage: 52 L/p/d<br>Annual hot water consumption: 52 x 2 = **104** L/p/d | In order |
| | | | Stipulated 24hr hot water @ 60°C min: 35 L/p<br>Minimum solar hot water storage: ((35)*1.5) x 2 = **105** L/p | In order |
| | PIPE INSULATION (hot water pipe) | Internal pipe diameter ≤ 80mm: Minimum R-value of 1.00 | Closed cell elastomeric thermal insulation mm 38 / W/m.K 0.036 / R-Val. 1.06<br>**Total R-value:** **Req. 1.0** **1.06** | In order |
| 9 | LIGHTING Classification H4 | The building lighting is in accordance with the requirements of 6.2 | LED & CFL deemed to comply with Table 12 for **H3 & H4** | In order |

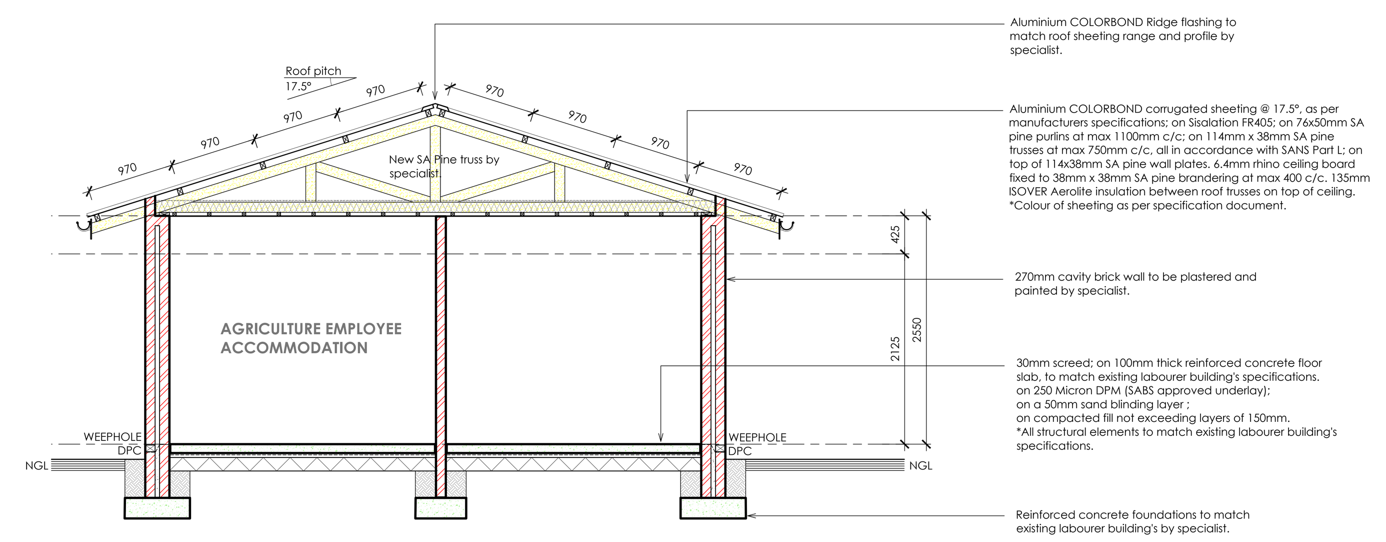


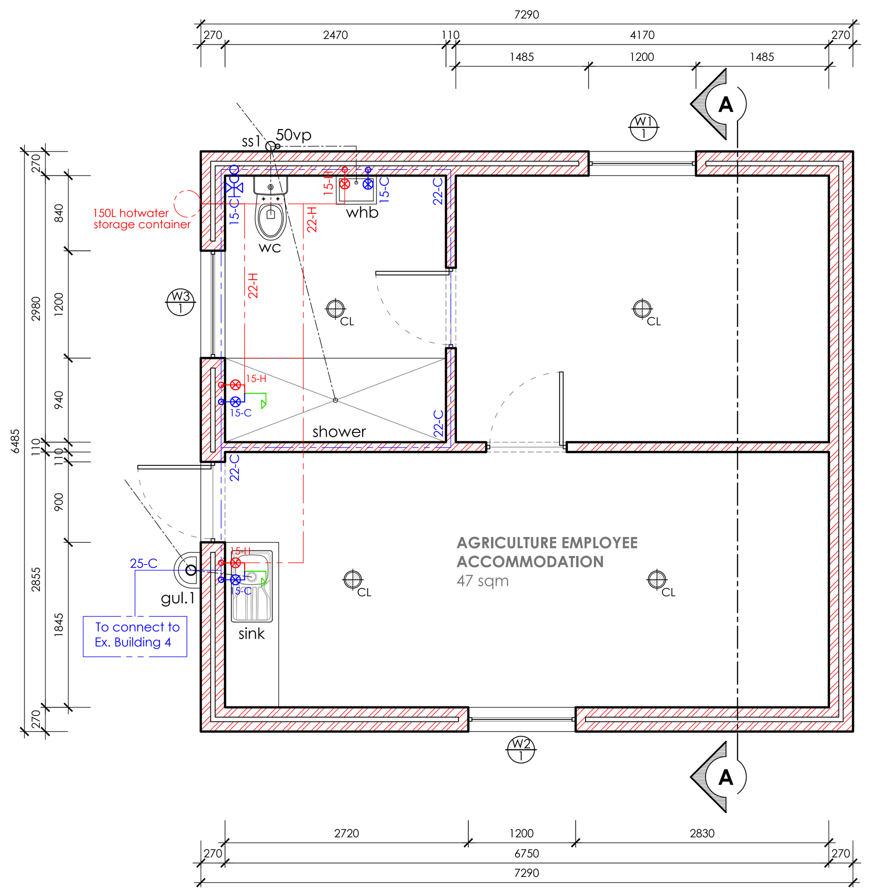


## FLOOR PLAN / PROPOSED BUILDING (1-3)
SCALE 1:50

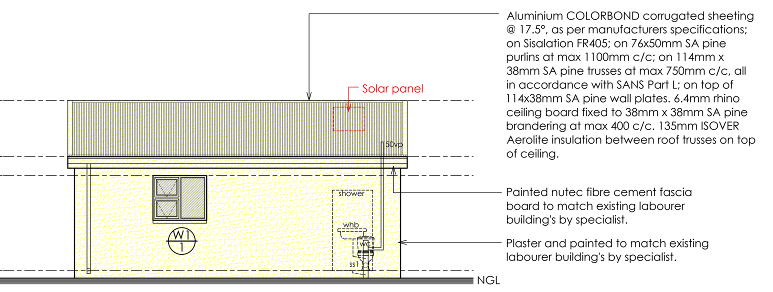


## NORTH ELEVATION / PROP. BUILDING (1-3)
SCALE 1:100

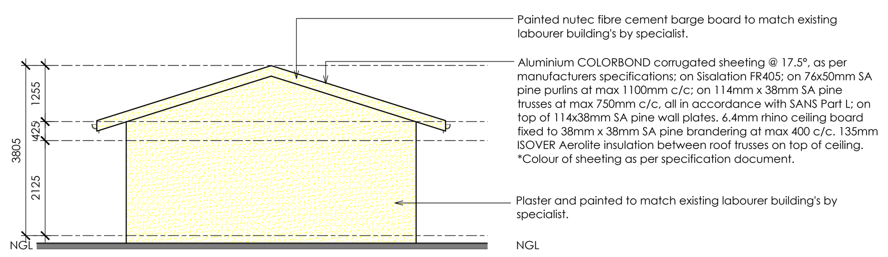


## EAST ELEVATION / PROP. BUILDING (1-3)
SCALE 1:100

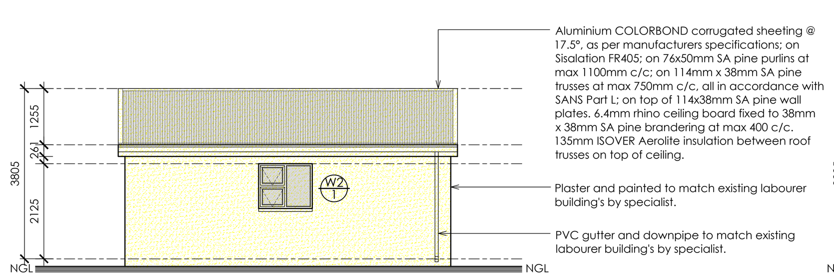


## SOUTH ELEVATION / PROP. BUILDING (1-3)
SCALE 1:100

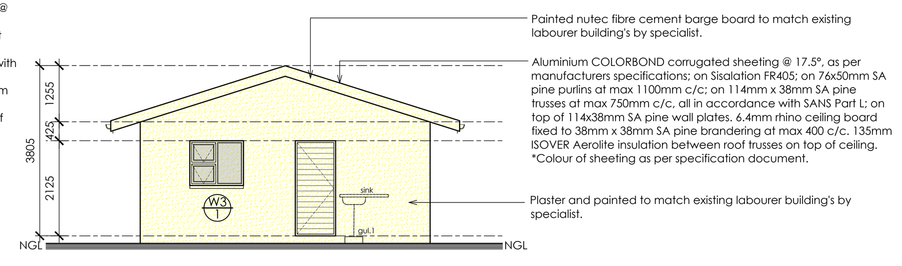


## WEST ELEVATION / PROP. BUILDING (1-3)
SCALE 1:100

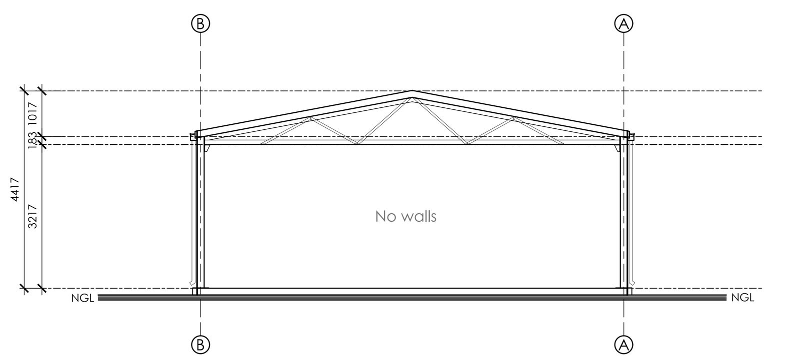


## NORTH ELEVATION / EX. BUILDING (8)
SCALE 1:100

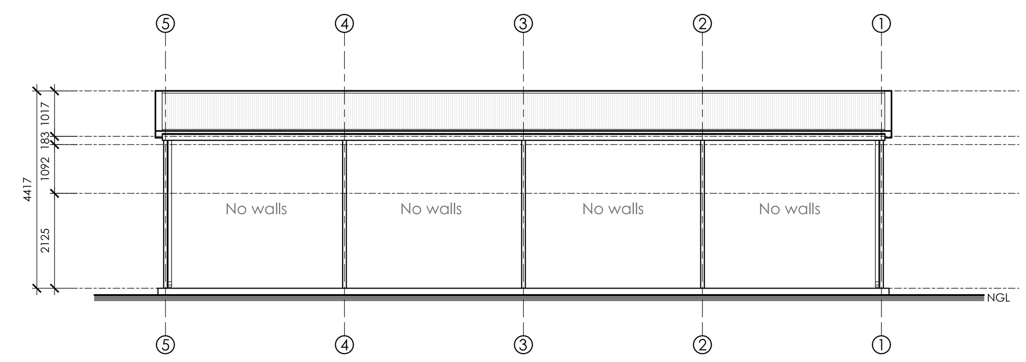


## EAST ELEVATION / EX. BUILDING (8)
SCALE 1:100

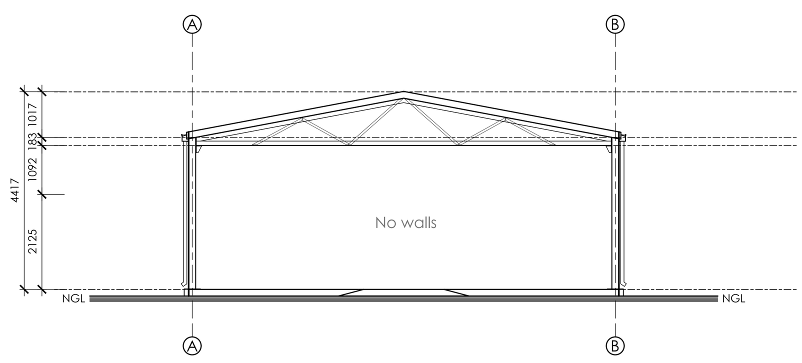


## SOUTH ELEVATION / EX. BUILDING (8)
SCALE 1:100

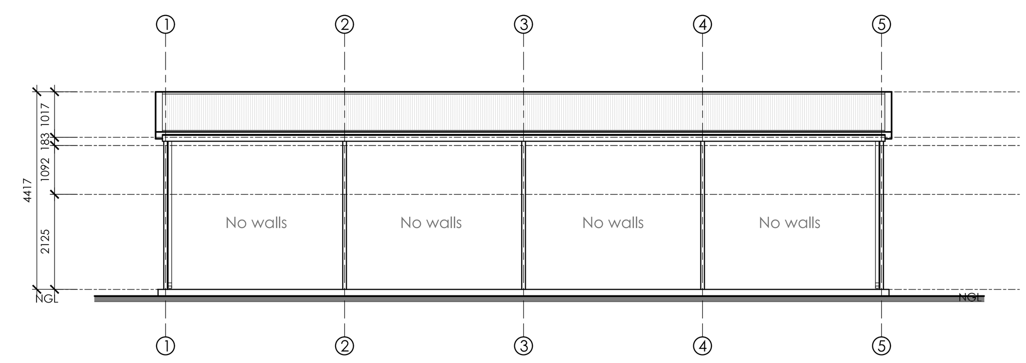


## WEST ELEVATION / EX. BUILDING (8)
SCALE 1:100

## MUNICIPAL INFORMATION:

| | |
|---|---|
| Erf No.: | ERF **2377, THEESCOMBE** |
| Existing Erf Area: | 29005 sqm |
| Existing floor Area: | 925 sqm |
| New floor Area: | 141 sqm |
| Total Floor Area: | 1066 sqm |
| Ex. Coverage: | 925 sqm - 3.19% |
| Prop. Coverage: | 141 sqm - 0.49% |
| Total Coverage: | 1066 sqm - **4%** |
| NEW GARAGES: | 0 |
| NEW BATHROOMS: | 0 |

## TOWN PLANNING INFO.

| | (Permitted) | (Proposed) |
|---|---|---|
| Zoning: | Agriculture Zone 1 | Agriculture Zone 1 |
| Height Restriction: | 8.5M / 15M | 8.5M / 15M |
| Building Line Front | 10 000mm | 10 000mm |
| Building Line Sides | 10 000mm | 10 000mm |
| Building Line Rear | 10 000mm | 10 000mm |
| Ex. Coverage: | ----- | 925 sqm - 3.19% |
| Prop. Coverage: | ----- | 141 sqm - 0.49% |
| Total Coverage: | 5801 sqm - **20%** | 1066 sqm - **4%** |
| FSI | 0.60 | 0.04 |
| PARKING BAYS | 48.3 Bays | 55 Bays |

**PARKING CALCULATIONS**
AS PER PAGE 101

**REQUIRED PARKING** = **48.3**

PARKING PROVIDED BAY FOR DISABLED 02 parking
NORMAL BAYS 53 parkings

**PROPOSED PARKING** = **55**

## ELECTRICAL LEGEND

- Single wall mounted light switch to be mounted at 1300mm above uffl.
- Double wall mounted light switch to be mounted at 1300mm above uffl.
- Triple wall mounted light switch to be mounted at 1300mm above uffl.
- 2-way wall mounted light switch to be mounted at 1300mm above uffl.
- Watertight wall mounted light switch to be mounted at 1300mm above uffl.
- Dimmer wall mounted light switch to be mounted at 1300mm above uffl.
- Double wall mounted plug, top of socket to be 1250mm above uffl
- Double wall mounted plug, top of socket to be 300mm above uffl
- Double wall mounted watertight plug
- Extractor connection plug @ 2100mm
- Blank conduiting boxes
- Periscope plug as per specification.
- Garage door ceiling mounted motor
- TV point aerial
- Shavers plug
- Telkom point
- Network point
- Stove isolator
- Power Skirting
- (2 x 18 W) 1500 Long 2 tube fluorescent armature with prismatic diffuser suspended from ceiling.
- 5 Watt LED Down lighter as per specification
- 20 Watt Compacted Fluorescent hanging pendant light as per specification
- 20 Watt Compacted Fluorescent ceiling light as per specification
- 30 Watt Fan-light ceiling mounted
- (5 Watt x 2 ) Internal LED Wall mounted light
- (10 Watt x 2 ) External LED Wall mounted light
- 50 Watt External LED Wall mounted spotlight
- 13 Watt Internal compact Fluorecent Up Lighter (wall mounted) as per client
- Starlights (wall mounted) as per client
- LED Strip Lighting
- Pool light as per client
- Foot light
- Electrical fence control box.
- Gate Control Unit
- Pre-paid Electricity meter
- Daylight sensor
- Intercom panel
- Intercom system
- Alarm panel
- Alarm system
- Hair dryer waterproof plug
- Main distribution board
- Sub distribution board
- Uninterruptible power supply
- Sleeve to be installed for future Fibre optic installations, sleeve to be as per specialist.

## WATER RETICULATION LEGEND

- proposed cold water source point. plumber to tap into existing cold water pipes at this point
- municipal water connection and stop cock
- garden tap position
- proposed cold water reticulation
- proposed hot water reticulation
- proposed cold water pipe up
- proposed cold water pipe down
- proposed hot water pipe down
- proposed cold water stopcock
- proposed hot water stopcock
- proposed cold tap
- proposed hot tap
- shower head
- HP external mounted heat pump as per specialist.
- solar geyser on roof with geyser in the ceiling space as per specialist.

95mm flexible polyester blanket insulation to new geyser to achieve R-value of 2.00

50mm flexible polyester insulation to all new hot water pipes to achieve R-value of 1

## FIRE PLAN LEGEND

- Smoke Detectors (S)
- Manual Control Panel (MCP)
- Signage for direction of fire escape route
- Signage for fire extinguisher
- Fire extinguisher (4.5KG / 9KG DCP EX.)
- Fire blanket
- Fire escape route
- 30m Fire hose reel (30m FHR)
- Fire hydrant (H)

## REVISIONS:

## GENERAL NOTES:

All dimensions to be checked on site before construction commences. All dimensions are given in millimeters, unless otherwise specified. Contractors to adhere to all local authority's regulations and requirements. Contractors to be a suitably qualified and registered participant in the construction industry as required by Construction Regulation 2014. Drawings to be read in conjunction with the clients OHS (Occupational Health and Safety) file. All work to be done in accordance with the National Building Regulations SANS 10400. Before this drawing is priced it is the contractor's responsibility to ensure he is familiar with the site. All trade names quoted may only be substituted by similar, subject to architect's approval. All materials to be installed in strict accordance with manufacturer's specifications. All conduit work to be SABS approved quality. All light fittings is to be fitted to comply with the relevant code of practice as specified in SANS 10400: Part O. All new work to be made good with existing. This drawing is not to be scaled unless printed by H. Gouws renders. All existing dimensions not to be scaled from drawings but to be checked on site. Any discrepancies shall be reported to the designer immediately and clarified by the architect prior to commencement of work. Top of foundations to be a minimum of 150mm below finished ground level. Minimum 100mm thick concrete surface bed as per Engineers drawings to be on 250 mic. "gunplas" ubs green dpm on 50mm sand blinding layer and on well compacted fill in layers not more than 150mm. SABS Approved "gundle" 375 mic. dpc under all walls, window cills and at changes in floor level. These architectural drawings to be read in conjunction with engineers and consultants drawings, where applicable. All building work to be carried out in accordance with the national building regulations. The contractor is responsible for all site visits by local inspectors and pay all fees in connection therewith. All drainage work to be carried out in accordance with the national building regulations. All roof measurements to be taken on site by roof specialist prior to roof construction. All tile layouts to be confirmed with architect prior to commencing. Levels shown are relative to a benchmark at 100.00 msl of new floor level. Msl is not the actual level but a benchmark to base other heights of the building shown on the drawings. Contractor to keep a full set of latest issued drawings on site. Contractor is responsible for the correct setting out of the building on site with reference to the building line and boundaries. Contractor to take responsibility for all health and safety measures on site.

DRAWING TITLE:

**MUNICIPAL SUBMISSION**

PROJECT TITLE:

ADDITIONS ON **ERF 2377, THEESCOMBE** , PORT ELIZABETH FOR **Mr Saunders**

25 May 26
CLIENT SIGNATURE

BLACKHOUND ARCHITECTURE & RENDERING
dewald@blackhoundenterprises.com
072 799 9597 | 072 418 6867
https://blackhoundenterprises.com
Unit 10, The Network, 19 Cactus Rd
Fairview, Port Elizabeth, 6070

25 May 26
PROFESSIONAL SIGNATURE

## MUNICIPAL INFORMATION:

| | |
|---|---|
| ERF NO: | **2377, Theescombe** |
| ERF AREA: | 29005 sqm |
| EXISTING AREA: | 925 sqm |
| NEW AREA: | **141 sqm** |
| TOTAL AREA: | 1066 sqm |
| EX. COVERAGE: | 925 sqm - 3.19% |
| NEW COVERAGE: | **141 sqm - 0.49%** |
| TOTAL COVERAGE: | 1066 sqm - 4% |
| NEW GARAGES: | 0 |
| NEW BATHROOMS: | 0 |
| POOL: | NO |
| BOUNDARY WALLS: | 0 M |
| AGE OF BUILDING: | 27 |

PROFESSIONAL ARCHITECTURAL TECHNOLOGIST
DEWALD MATHYS POTGIETER
14:52 PM (Africa/Johannesburg) on 25 May 2026

COPYRIGHT:
This drawing is subject to copyright, and may not be reproduced in whole or part in any matter whatsoever without written permission from Blackhound Architecture & Rendering.

| | |
|---|---|
| PROJECT NO.: 2026_STABLES | REVISION NO.: 00 |
| DRAWING NO.: 20260525_STABLES_MS01 | SHEET NO.: 301 |
| DRAWN BY: DMP | |
| PRINT DATE: 25 May 2026 | PAGE SIZE: A0 |