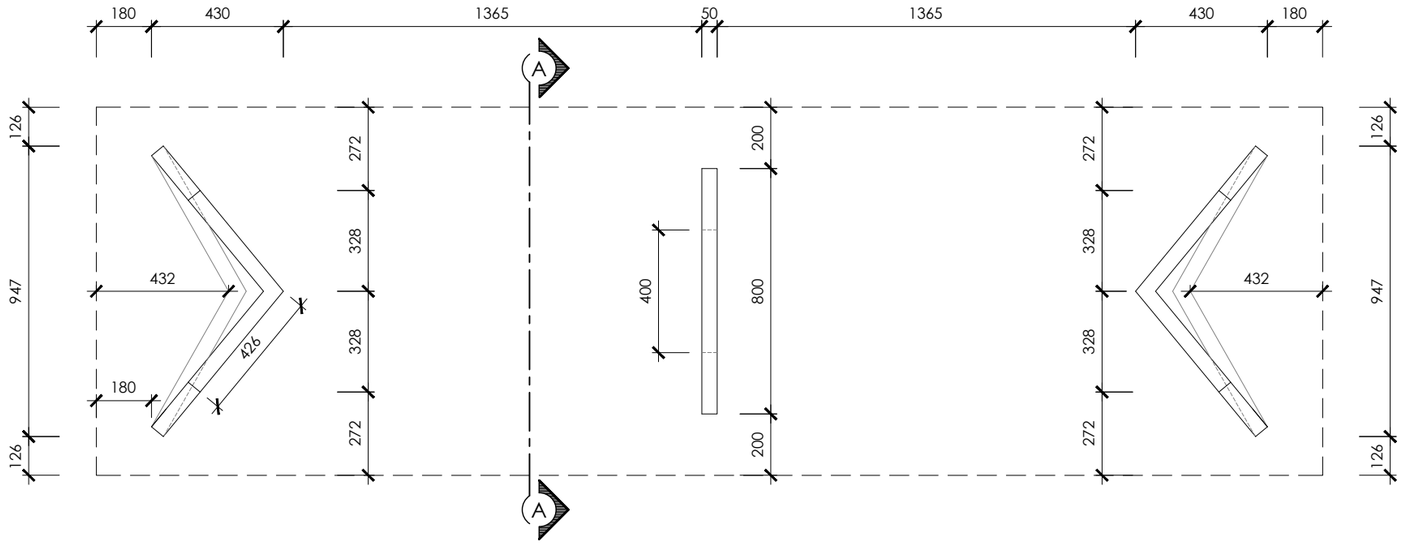

TOP VIEW / BOARDROOM TABLE

SCALE 1:20

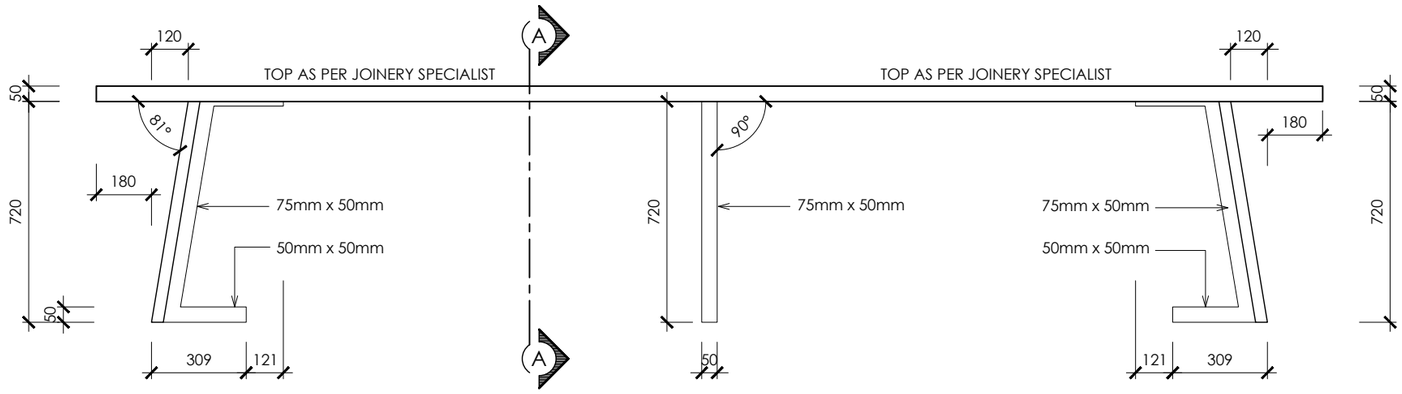

SIDE VIEW 1 / BOARDROOM TABLE

SCALE 1:20

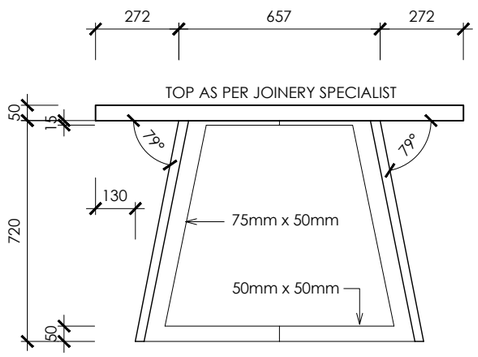

SIDE VIEW 2 / BOARDROOM TABLE

SCALE 1:20

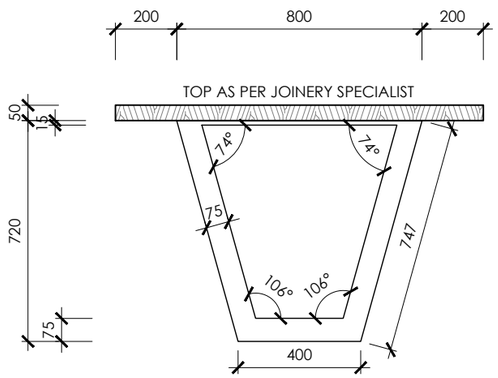

SECTION A-A / BOARDROOM TABLE

SCALE 1:20

REVISIONS:

GENERAL NOTES:

All dimensions are given in millimeters, unless otherwise specified.All dimensions to be checked on site before construction commences. Contractors to adhere to all local authority's regulations and requirements. All work to be done in accordance with the National Building Regulations SANS 10400.All existing dimensions not to be scaled from drawings and to be checked on site. These architectural drawings to be read in conjunction with engineers and consultants drawings where applicable

DRAWING TITLE:

TECHNICAL DRAWINGS

PROJECT TITLE:

INTERNAL ALTERATIONS ON **ERF 13047, UITENHAGE** , UITENHAGE FOR **Gubb & Inggs (Office Block)**

10 Apr 25

CLIENT SIGNATURE

BLACKHOUND
ARCHITECTURE & RENDERING

dewald@blackhoundenterprises.com
072 799 9597 | 072 418 6867
https://blackhoundenterprises.com
Unit 10, The Network, 19 Cactus Rd
Fairview, Port Elizabeth, 6070

10 Apr 25

PROFESSIONAL SIGNATURE

COPYRIGHT:

This drawing is subject to copyright, and may not be reproduced in whole or part in any matter whatsoever without written permission from Blackhound Architecture & Rendering.

PROJECT NO.: G&I - _OfficeBlock

DRAWING NO.: 20250404_OfficeBlock_CD01

DRAWN BY: DMP

PRINT DATE: 10 Apr 2025

PAGE SIZE: A3

REVISION NO.: 00

SHEET NO.: 308