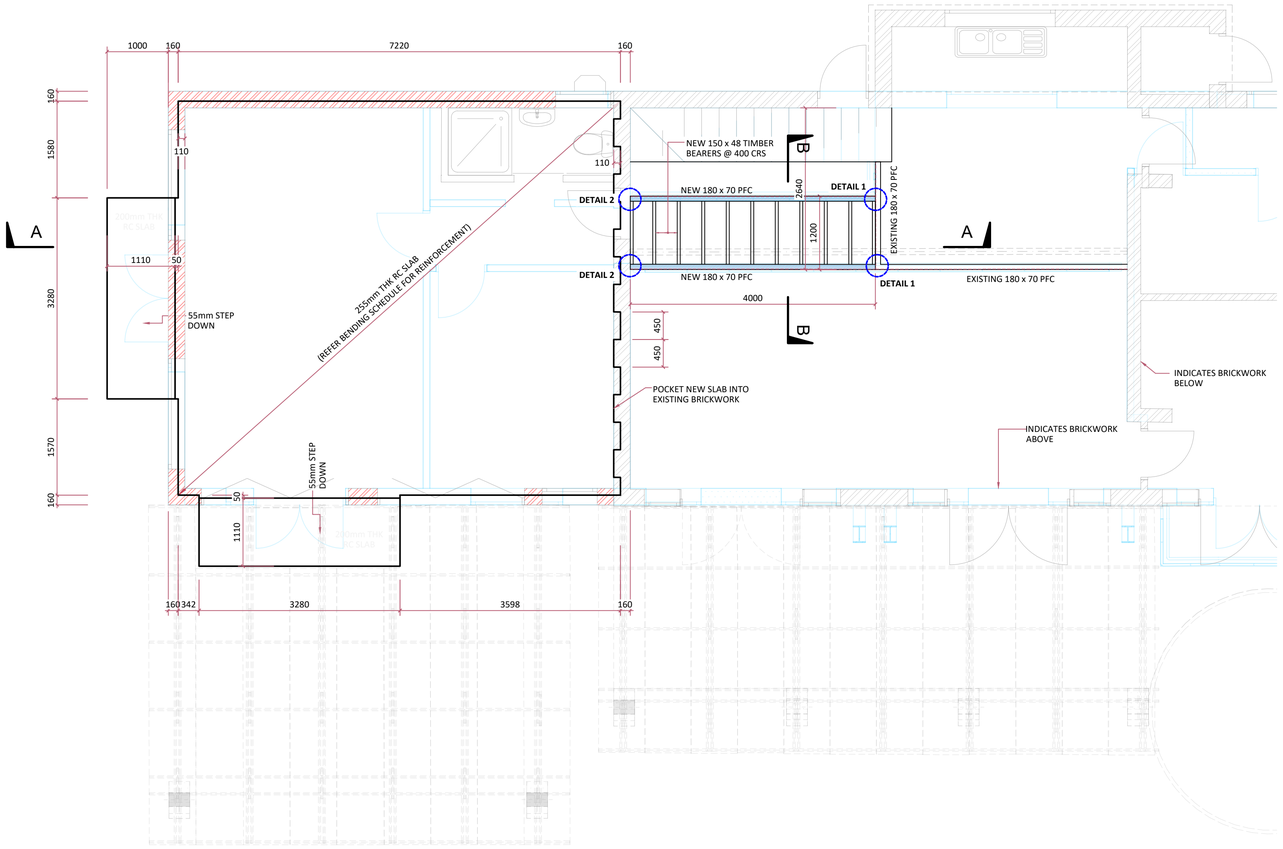

FIRST FLOOR RC SLAB LAYOUT
SCALE 1:50

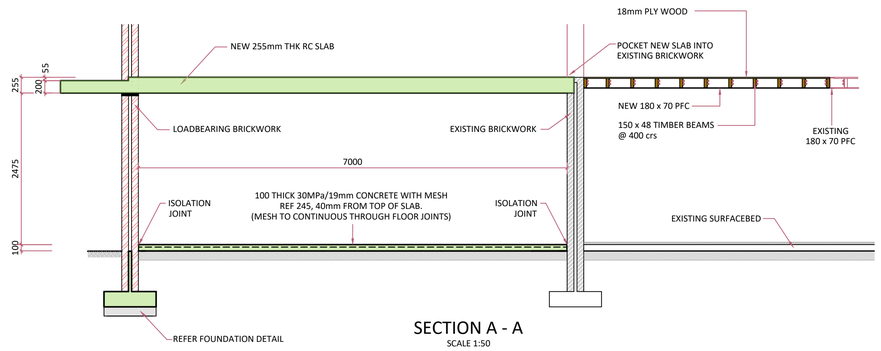

SECTION A - A
SCALE 1:50

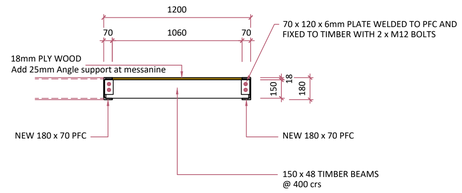

SECTION B - B
SCALE 1:25

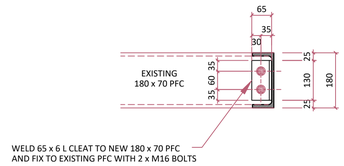

DETAIL 1
SCALE 1:10

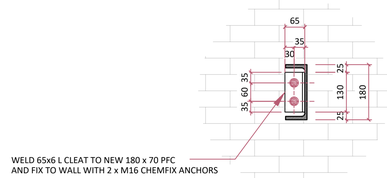

DETAIL 2
SCALE 1:10

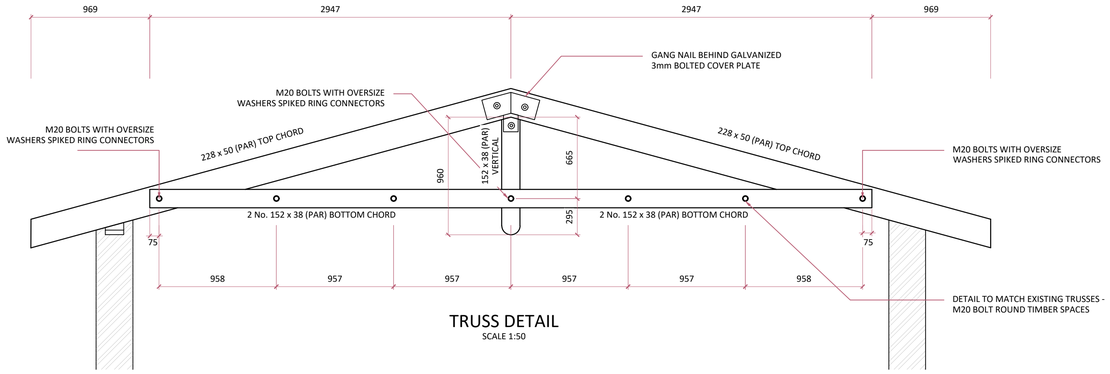

TRUSS DETAIL
SCALE 1:50

NOTE :

- ALL CORNERS TO BE ROUTED TO MATCH EXISTING.
- ALL CONNECTIONS BRACKETS AND BOLTS TO MATCH EXISTING.
- ADD TOP CHORD BRACING BOT WAYS - BOTH SIDES WITH HOOP IRON STAPPING - TRUSS SPACING AND PURLINS TO MATCH EXSITING
- ALL TIMBER TO BE PLANED ALL ROUND.

THIS DRAWING IS THE PROPERTY OF INCONSULT ENGINEERS AND COPYRIGHT THERE OF IS RESERVED

NOTES

1. ALL CONCRETE WORK TO BE IN ACCORDANCE WITH SABS 1200GA.
2. CONCRETE STRENGTH TO BE 30 MPa.
3. MINIMUM COVER TO BE 50mm TO FACES AND 30mm TO SOFFIT.
4. ALL STRUCTURAL STEEL TO IN ACCORDANCE WITH SABS 1200HA.
5. ALL STRUCTURAL STEEL TO BE GRADE 300W.
6. ALL STRUCTURAL STEEL TO BE PAINTED AS PER ENGINEERS SPECIFICATION.
7. ALL BOLTS TO BE M16 GRADE 8.8 BOLTS, UNLESS OTHERWISE SHOWN.
8. ALL WELDS TO BE 6mm FILLET WELDS.

PROJECT:
PROPOSED ALTERATIONS TO EXISTING DWELLING ON ERF 1609, 21 ANDRIES PRETORIUS STR, THE ISLAND, SEDGEFIELD

CLIENT:
FRASER FAMILY TRUST

ISSUED FOR:
.

STANDARD SIGNOFF	NO. OF PRINTS ISSUED							
CONTRACTOR	-	-	-	-	-	-	-	
EARTH WORKS	-	-	-	-	-	-	-	
PROJECT MANAGER	-	-	-	-	-	-	-	
STEEL CONTRACTOR	-	-	-	-	-	-	-	
QUANTITY SURVEYOR	-	-	-	-	-	-	-	
ARCHITECT	-	-	-	-	-	-	-	
CLIENT	-	-	-	-	-	-	-	
DATE OF ISSUE:	.	.	.	.	.	.	.	
REVISION No:								

DRAWING ISSUE RECORD

R	DATE	REVISION	BY
0	27-09-2024	ISSUED FOR TENDER	TK

INCONSULT ENGINEERS
11 WESTBOURNE RD
RICHMOND HILL
PORT ELIZABETH
6001
TEL: 041 811 2478
CELL: 082 7811770
FAX: 086 6959214

DRAWING:
FIRST FLOOR SLAB AND TRUSS DETAILS

SCALE:	DATE:	DRAWN:
As shown	JAN 2026	T.K

DESIGN
T. Jones Pr Eng 980174

APPROVED:

JOB NO:
000

DRAWING NO:
000-T-02 REV. 0